CDE AXLH Series Axial-Leaded Aluminum Electrolytic Capacitors.

150 °C, Ruggedized Design for
High Performance Applications

CDÉ
ENERGIZING IDEAS
CORNELL DUBILIER

CDE AXLH Series Ruggedized Axial-Leaded Aluminum Electrolytic Capacitors.

The AXLH is a uniquely-designed axial-lead electrolytic that has the performance characteristics required for mission-critical circuitry.

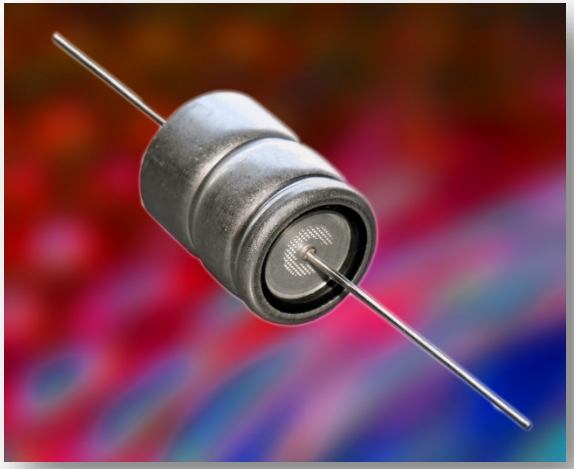

- Up-to 28 amps RMS continuous ripple current
- Withstands vibrations up to 20g's
- Rated at 150 °C, for 2,000 hours
- -40 °C to +150 °C operating range permits use in virtually any environment

CDE ENERGIZING IDEAS CORNELL DUBILIER

AXLH Series includes nine values, with a focus on popular ratings.

Capacitance from 470µF to 4,700µF, with voltage ratings from 25Vdc to 63Vdc.

Rated Capacitance 100Hz/+20°C (µF)	VDC	Cornell Dubilier Part Number	Case Size D x L (mm)	Max. ESR 100 Hz/+20°C (mΩ)	Max. ESR 100 kHz/+20°C (mΩ)	Rated Ripple Current ≥ 5kHz/+125°C (A)
2200	25	AXLH222P025ED	20 x 27	50	25	7.1
3300	25	AXLH332P025EH	20 x 35	34	17	8.9
4700	25	AXLH472P025EL	20 x 43	25	13	10.3
1500	40	AXLH152P040ED	20 x 27	57	22	7.3
2200	40	AXLH222P040EH	20 x 35	41	17	8.9
2700	40	AXLH272P040EL	20 x 43	32	13	10.1
470	63	AXLH471P063ED	20 x 27	125	32	5.5
680	63	AXLH681P063EH	20 x 35	87	23	6.9
900	63	AXLH901P063EL	20 x 43	67	18	8.1

CDÉ CORNELL DUBILIER
ENERGIZING IDEAS

Performance levels above that of conventional electrolytics.

Key characteristics make the AXLH an excellent match for high-stress applications in military, aerospace, down-hole and off-road transportation.

- 20g vibration rating (MIL-STD-202, test method 204)
- Maximum ESR ranges from 13 to 32mΩ at100kHz

CDÉ CORNELL DUBILIER
ENERGIZING IDEAS

Performance for the long run.

- Low ESR
- High ripple current
- 10 year shelf life @40 º
- Excellent capacitance retention over rated temperature range
- 100% dynamically tested

CDÉ
ENERGIZING IDEAS
CORNELL DUBILIER

The Right Choice for High-Reliability Applications.

Targeted application fields include:

- Military and aerospace
- Off-road vehicles
- Energy and other infrastructure electronics

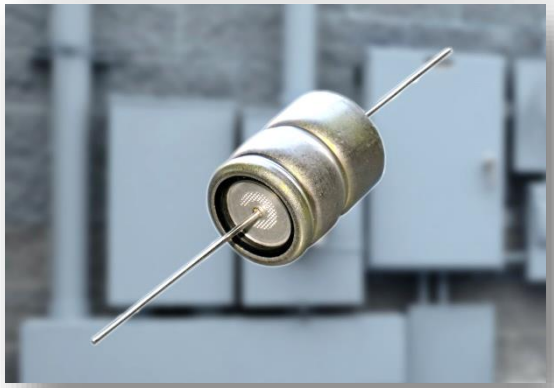

CDÉ CORNELL DUBILIER

ENERGIZING IDEAS

Design Characteristics

- Case diameter is a low-profile 20mm for all values
- Depending on value, length vary from 27 to 43mm
- Axial lead wires are a substantial 1 mm

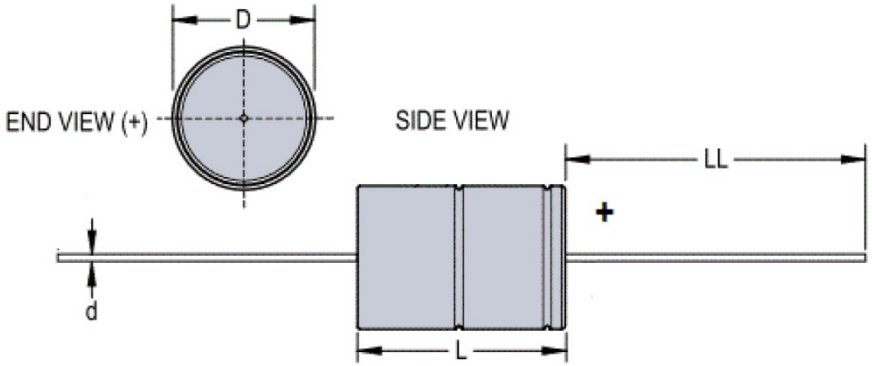

CDÉ CORNELL DUBILIER
ENERGIZING IDEAS

CDE AXLH Series Summary

- Rated at 150 °C for 2,000 hours
- Handles vibrations up to 20g's
- High ripple current
- Nine values from 470µF to 4,700µF; 25Vdc to 63Vdc

CDÉ ENERGIZING IDEAS CORNELL DUBILIER